Check for updates

Received: 28 August 2023 | Revised: 17 January 2024 | Accepted: 28 January 2024

DOI: 10.1002/rob.22305

RESEARCH ARTICLE

WILEY

Gyroscopic precession control for maneuvering two-wheeled robot recoil stabilization

Gökhan Çetin[1] | Faruk Ünker[2]

[1]Department of Electrical and Electronics Engineering, Gümüşhane University, Gümüşhane, Turkey

[2]Department of Mechanical Engineering, Gümüşhane University, Gümüşhane, Turkey

Correspondence
Gökhan Çetin, Department of Electrical and Electronics Engineering, Gümüşhane University, Gümüşhane, Turkey.
Email: gokhancetin@gumushane.edu.tr

Abstract

A two-wheeled robot has high maneuverability and can spin around with a high velocity but is prone to roll over under a recoil force. Because the wheels are only used to control the maneuver speed of the robot. However, a two-wheeled robot using a gyroscope does not need the control of the wheels and can maintain the stability of the robot under a recoil force during maneuvers even if the gimbal of the gyroscope is not controlled by a torque. In this study, the equations of motion of the gyroscopic robot are derived via Lagrangian equations, and the balancing performance of the uncontrolled gyroscope is simulated via Matlab to determine a desired configuration for mechatronics system design. Then, a linear-quadratic regulator (LQR) is implemented to the chosen control moment gyroscope (CMG) configuration and compared in simulations of RecurDyn. LQR controller was used to prevent oscillating motions of double CMGs under the recoil force of a weapon. The simulation results showed that the gyroscopic two-wheeled robot is improved using an LQR controller and powerfully balanced in static with excellent performance.

KEYWORDS

control moment gyroscope, gyro-stabilizer, impact, impulsive load, LQR controller, maneuvering, recoil force, shock, spinning around, two-wheeled robot, weapon

1 | INTRODUCTION

A powerful technique for stabilizing vehicles is the use of angular momentum (Reza Larimi et al., 2015). The stability is enhanced significantly through a spinning flywheel accelerating or decelerating. However, this approach also has disadvantages, including a limit on the maximum speed capacity of a rotor. This is because when the flywheel's speed is not changing, there is no angular momentum in the roll angle of the vehicle to generate the balancing torque. Compared with a reaction wheel, a similar flywheel of the control moment gyroscope (CMG) can maintain a high rate of angular momentum and relatively low power consumption by rotating the gimbal axis of a fast-spinning flywheel although flywheel spin velocity is constant (Amin et al., 2023; Çetin & Ünker, 2023; Ünker, 2022a, 2022b, 2022c, 2023a, 2023b). Due to generating much higher torque than reaction wheels, CMGs have a wide range of applications for vehicles, including balancing aids for robots (Amin et al., 2023; Çetin & Ünker, 2023; Ünker, 2022a, 2022b, 2023a), trucks (Ünker, 2022c, 2023b), and ships (Song et al., 2023). On the other hand, a well-known disadvantage of using CMGs for stabilizing is the existence of a controller requirement, in which the flywheel placed inside a gimbal may not stand stably without a closed-loop controller under a constant load although it generates an angular momentum (Amin et al., 2023; Çetin & Ünker, 2023;

This is an open access article under the terms of the Creative Commons Attribution License, which permits use, distribution and reproduction in any medium, provided the original work is properly cited.
© 2024 The Authors. *Journal of Field Robotics* published by Wiley Periodicals LLC.

Ünker, 2022a, 2022c, 2023a). When a gimbal is not controlled by a tilt torque for the vehicle to remain balanced, CMG cannot meet the disturbance torque in the direction of the vehicle roll.

Also, researches on useful mobile robots are developing deliberately at high speeds even on rough terrain (Chan et al., 2013). As a kind of mobile robot, a two-wheeled robot is a very powerful in stability control compared to humanoid robots due to its high maneuverability and the characteristics of a small ground contact (Chan et al., 2013). The two-wheeled robot can move in very limited or narrow places, stand and turn stably at low speed. As a rolling motion control method, the approach based on changing the center of mass can also be used to balance the two-wheeled robot (Chan et al., 2013). However, as an unstable and highly nonlinear system, the torque output for shifting the center of gravity cannot be very high in mass balancing. So, CMG can be used as an indirect robot actuator for balancing two-wheel mobile robots (Amin et al., 2023; Çetin & Ünker, 2023; Ünker, 2022a, 2022b, 2023a). Moreover, CMG gives this two-wheeled robot advantage over conventional robots due to the effect of gyroscopic precession (Amin et al., 2023; Çetin & Ünker, 2023; Song et al., 2023; Ünker, 2020, 2022a, 2022b, 2022c, 2023a, 2023b; Ünker & Çuvalcı, 2016a, 2016b, 2019, 2015a, 2015b, 2021). Ünker (2022a, 2023a) proposed this technique for the roll-angle balancing of a two-wheeled robot. The gimbal is steered with torque generated via a controller signal. Because the CMG requires less angular momentum for stability with a control torque applied to the gimbal. At the same time, as a highly nonlinear system, the relation between gyroscopic precession and the conservation of angular momentum controls the balance. Therefore, the gyroscopic control technique for balancing two-wheeled robots is an excellent alternative for researchers.

CMG importantly requires a closed-loop controller to robustly stabilize the gyro, which simultaneously keeps the robot in the upright position. As a linear controller, linear-quadratic regulator (LQR) can be implemented in the CMG to control the robot balance and to track the referenced command (Amin et al., 2023; Çetin & Ünker, 2023). Torque through the LQR controller is utilized to twist the gimbal that stabilizes the head (roll) angle of the two-wheeled robot. The tilt torque, subjected to the gimbal, can steer the angular momentum of a fast-spinning flywheel of a gyro to either side. LQR control of the large angular momentum of the CMG provides a two-wheeled robot with good dynamic static and dynamic stability. Hence, the problem of posture stabilization of the two-wheeled robot is solved using LQR-controlled CMG.

Amin et al. (2023) proposed an LQR controller as an active rollover control system using equations of motion, providing two-wheeled robots with better predictability for model-based roll detections. A CMG using an LQR controller eliminates sinusoidal motions (Amin et al., 2023) which can help the two-wheeled robot achieve stable balance under a recoil force. The control method chosen to provide the vertical stability of a two-wheeled robot is highly dependent on the gimbal's control parameters. The gyro dynamics of the two-wheeled robot under a recoil force have been developed in the previous work (Ünker, 2023a).

In this study, a two-wheeled robot using an LQR-based CMG has been investigated under weapon firing while spinning around to acquire and track a high-speed target. However, it is much more challenging to track a desired trajectory when a two-wheeled robot is spinning around at a constant speed under a recoil force. The robustness and anti-interference ability of the LQR controller can reduce the influence of the recoil impulses. There is obvious equalizing between recoil force and angular momentum in both directions when the CMG is steered by an LQR controller. In this paper, we focus on defining the system energies, deriving the nonlinear equations of motion, and simulation of the two-wheeled robot via RecurDyn software. The advantages of simulating such tedious tests with software are avoiding the high risks and costs of rollover data recordings of real vehicles. By implementing parameters of the appropriate K-matrix for the closed-loop control, we can observe the excellent performance of the two-wheeled robot with the approach of the LQR control system, which is employed in maintaining stability.

The motivation behind this research is to improve the stability and agility of a two-wheeled robot when facing external forces. While acknowledging the impact of recoil force from a weapon in this study, it is crucial to note that the scope of this research extends far beyond its applications in weaponry. Up until now, by applying control torque (τ_{wheel}), the wheels change the center of mass to control the orientation and stability of the two-wheeled (Chan et al., 2013). However, using only the wheels cannot counteract the recoil force during maneuvers. Since CMGs can provide much larger angular momentum than reaction wheels even at a smaller size, tilting the gimbal of a spinning flywheel via the use of an LQR controller can maintain the stability of a two-wheeled robot spinning around even under a recoil force. In this study, gyroscopic precession control via an LQR is utilized for a two-wheeled robot while spinning around with a high velocity under the recoil force of a weapon.

2 | SYSTEM IDENTIFICATION

As shown in Figures 1 and 2, the two-wheeled robot consists of the weapon, the wheels, the gimbals of the flywheels, and the body that integrates all. The CMGs are designed by double flywheels assembled through a gimbal that allows tilting of the spinning flywheel. Table 1 shows the key parameters of the two-wheeled robot that have been defined for the RecurDyn model. In the first step, uncontrolled CMGs have been investigated for the control performance of balancing the robot's posture (heading) angle and gyro's precession under the recoil force.

2.1 | Equations of motion for two-wheeled robot with the gyroscopes rotating in the same direction

The body and gimbals of the robot are connected through a two-d.o.f. kinematic chain. The nonlinear equations of the mathematical model of the two-wheeled gyro robot can be derived by using the Lagrangian method in a generalized coordinate system. Before

15564967, 2024, 4, Downloaded from https://onlinelibrary.wiley.com/doi/10.1002/rob.22305 by Egyptian National Sti. Network (Enstine), Wiley Online Library on [28/02/2026]. See the Terms and Conditions (https://onlinelibrary.wiley.com/terms-and-conditions) on Wiley Online Library for rules of use; OA articles are governed by the applicable Creative Commons License

deriving the equations, the kinetic energies of each dynamic part of this robot are determined as

$$T_{flywheel} = \frac{1}{2}m_d\varepsilon^2 R_g{}^2 + \frac{1}{2}I_o[(\dot{\theta} + \varepsilon \sin\varphi)^2 + (\dot{\varphi}\cos\theta + \varepsilon\sin\theta)^2] + \frac{1}{2}I_p(\Omega + \dot{\varphi}\sin\theta - \varepsilon\cos\theta\cos\varphi)^2, \quad (1)$$

$$T_{gimbal} = \frac{1}{2}m_g\varepsilon^2 R_g{}^2 + \frac{1}{2}I_{gx}(\dot{\varphi}\cos\theta + \varepsilon\sin\theta)^2 + \frac{1}{2}I_{gy}(\dot{\varphi}\sin\theta - \varepsilon\cos\theta\cos\varphi)^2 + \frac{1}{2}I_{gz}(\dot{\theta} + \varepsilon\sin\varphi)^2, \quad (2)$$

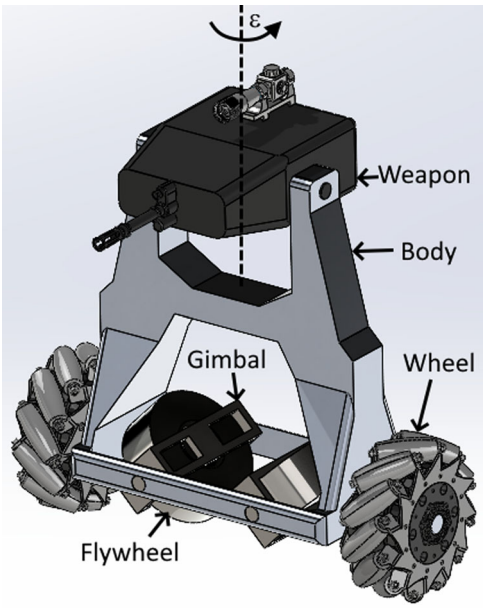

FIGURE 1 The gyroscopic two-wheeled robot including a weapon system.

$$T_{body} = \frac{1}{2}m_b(R_b\varepsilon\sin\varphi)^2 + \frac{1}{2}m_b[(-R_b\dot{\varphi}\sin\varphi)^2 + (R_b\dot{\varphi}\cos\varphi)^2] + \frac{1}{2}I_{bx}\dot{\varphi}^2 + \frac{1}{2}I_{by}\varepsilon^2\cos^2\varphi + \frac{1}{2}I_{bz}\varepsilon^2\sin^2\varphi, \quad (3)$$

$$T_{cannon} = \frac{1}{2}m_c(R_c\varepsilon\sin\varphi)^2 + \frac{1}{2}m_c[(-R_c\dot{\varphi}\sin\varphi)^2 + (R_c\dot{\varphi}\cos\varphi)^2] + \frac{1}{2}I_{cy}\varepsilon^2\cos^2\alpha + \frac{1}{2}I_{cz}\varepsilon^2\sin^2\alpha, \quad (4)$$

$$T_{wheel} = \frac{1}{2}m_w\varepsilon^2 R_w{}^2 + \frac{1}{2}I_{wx}\left(\varepsilon\frac{R_w}{r}\right)^2 + \frac{1}{2}I_{wy}\varepsilon^2. \quad (5)$$

Thus, the sum of kinetic energies of the two-wheeled robot with the double gyroscopes rotating in the same direction can be calculated below equation as follows:

$$T_{total} = 2T_{flywheel} + 2T_{gimbal} + 2T_{wheel} + T_{body} + T_{cannon}. \quad (6)$$

To neglect the potential energies of the gimbals and flywheels, the center of mass of the gyroscopes is placed along the axis of rotation, which passes through the joint point of the sprung mass and the axle. Thus, the total potential energy can be reduced to the following equation:

$$V_{total} = m_b g R_b\cos\varphi + m_c g R_c\cos\varphi. \quad (7)$$

In this way, we can derive the equations of the mathematical model by substituting the above kinetic and potential energies into the Lagrange equations for two degrees of freedom below.

$$\frac{d}{dt}\left(\frac{\partial T_{total}}{\partial\dot{\theta}}\right) - \frac{\partial T_{total}}{\partial\theta} + \frac{\partial V_{total}}{\partial\theta} = 0, \quad (8)$$

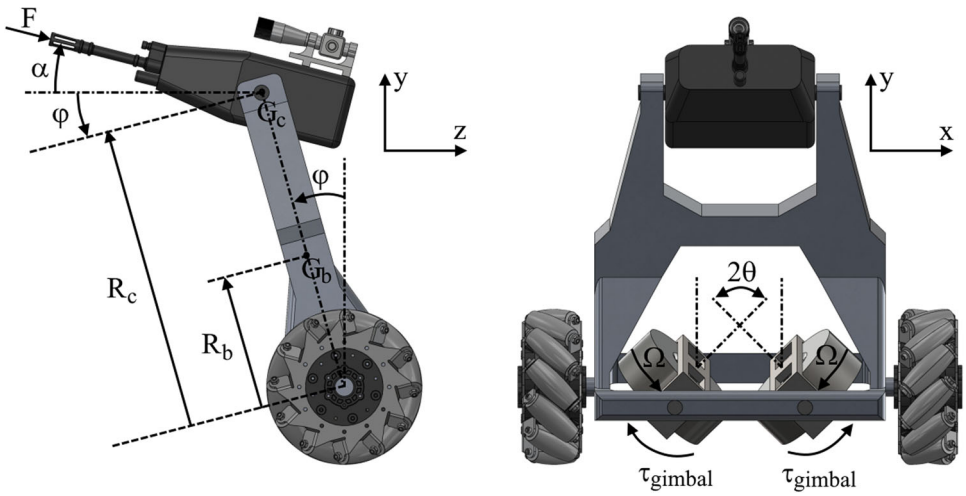

FIGURE 2 The gyroscopic two-wheeled robot subjected to a control torque (τ_{gimbal}).

15564967, 2024, 4, Downloaded from https://onlinelibrary.wiley.com/doi/10.1002/rob.22305 by Egyptian National Sti. Network (Enstinet), Wiley Online Library on [28/02/2026]. See the Terms and Conditions (https://onlinelibrary.wiley.com/terms-and-conditions) on Wiley Online Library for rules of use; OA articles are governed by the applicable Creative Commons License

TABLE 1 Physical properties of the weaponized gyroscopic robot.

Symbol	Numerical values	Description
g	9.80665 m/s^2	Gravitational acceleration
r	100 mm	Radius of each wheel
R_b	0.1658 m	Length of the body mass centroid
R_c	0.4000 m	Length of the centroid of the mass of the weapon turret
R_g	75 mm	Radius of the cornering of each gyroscope
R_w	252.5 mm	Radius of the cornering of each wheel
m_b	11.63414715 kg	Body mass
m_c	32.92594989 kg	Cannon mass
m_d	8.043051319 kg	Mass of each flywheel
m_g	1.516092019 kg	Mass of each gimbal
m_w	4.379595877 kg	Mass of each wheel
I_p	0.023334996 kg m^2	Rotary inertia of each flywheel
I_o	0.014017692 kg m^2	Mass moment of inertia of each flywheel
I_{gx}	0.007321234 kg m^2	Principal inertia moment of the gimbal along the x-direction
I_{gy}	0.006443733 kg m^2	Principal inertia moment of the gimbal along the y-direction
I_{gz}	0.001587586 kg m^2	Principal inertia moment of the gimbal along the z-direction
I_{bx}	0.153758088 kg m^2	Body's principal moments of inertia along the x-direction
I_{by}	0.248993965 kg m^2	Body's principal moments of inertia along the y-direction
I_{bz}	0.375405768 kg m^2	Body's principal moments of inertia along the z-direction
I_{cy}	0.258310358 kg m^2	Cannon's principal moments of inertia along the y-direction
I_{cz}	0.120890994 kg m^2	Cannon's principal moments of inertia along the z-direction
I_{wx}	0.025939338 kg m^2	Wheel's principal moments of inertia along the x-direction
I_{wy}	0.014622966 kg m^2	Wheel's principal moments of inertia along the y-direction
ε	2 rad/s	Speed of spinning around
Ω	3000 rad/s	Rotating speed of the flywheel
F	0–3000 N	Recoil load (impulsive force) exerted on the weapon turret
α	0	Weapon turret's displacement of head angle

$$\frac{d}{dt}\left(\frac{\partial T_{total}}{\partial \dot{\varphi}}\right) - \frac{\partial T_{total}}{\partial \varphi} + \frac{\partial V_{total}}{\partial \varphi} = -F(t)R_c(\cos\alpha\cos\varphi - \sin\alpha \sin\varphi). \tag{9}$$

From the above nonlinear equations of Lagrange, two degrees of freedom equations can be derived as follows:

$$\begin{aligned} &X_1\ddot{\theta} + X_1\varepsilon\dot{\varphi}\cos\varphi + X_2(\dot{\varphi}\cos\theta + \varepsilon\sin\theta)(\dot{\varphi}\sin\theta - \varepsilon\cos\theta) \\ &\quad - X_3(\dot{\varphi}\cos\theta + \varepsilon\sin\theta\cos\varphi)(\dot{\varphi}\sin\theta - \varepsilon\cos\theta\cos\varphi) \\ &\quad - X_4(\dot{\varphi}\cos\theta + \varepsilon\sin\theta\cos\varphi) = \tau_{gimbal}, \end{aligned} \tag{10}$$

$$\begin{aligned} &(2X_2\cos^2\theta + 2X_3\sin^2\theta + Y_1)\ddot{\varphi} - 2X_2\dot{\varphi}^2\sin\theta\cos \\ &\quad \theta + 2(X_2 - X_3\cos\varphi)(\varepsilon\dot{\theta}\cos^2\theta - \varepsilon\dot{\theta}\sin^2\theta) - 2Y_2\dot{\varphi}\dot{\theta} \\ &\quad \sin\theta\cos\theta - 2X_1\dot{\theta}\varepsilon\cos\varphi - (Y_3 + 2X_3\cos^2\theta)\varepsilon^2\sin\varphi \\ &\quad \cos\varphi - Y_4\sin\varphi + 2X_4(\dot{\theta} - \varepsilon\sin\varphi)\cos \\ &\quad \theta = -F(t)R_c(\cos\alpha\cos\varphi - \sin\alpha\sin\varphi). \end{aligned} \tag{11}$$

In which

$$\begin{aligned} &X_1 = I_o + I_{gz},\ \ X_2 = I_o + I_{gx},\ \ X_3 = I_p + I_{gy},\ \ X_4 = I_p\Omega,\ \ Y_1 = m_b \\ &\quad R_b^2 + m_cR_c^2 + I_{bx},\ \ Y_2 = I_{gx} - 2I_{gy} - 2I_p + I_o,\ \ Y_3 = m_bR_b^2 \\ &\quad + m_cR_c^2 - I_{by} + I_{bz} + 2I_o + 2I_{gz},\ \ Y_4 = g(m_bR_b + m_cR_c). \end{aligned}$$

In this study, software such as Matlab tool including the fourth-order Runge–Kutta method can be used to solve equations of motion with the help of the physical parameters given in Table 1. To identify the dynamic behavior of motion, each simulation of RecurDyn and Matlab was run for 60 s with zero initial conditions and a time step size of 0.001 s during each sweep. Due to the stable results of simulations, the time responses for the first 10 s were given in the figures.

In the following calculations, the simulations of the equations were compared with the model simulations of RecurDyn for different working conditions of the gyroscope. In the below comparisons, there is a small steady-state error between the simulations of the theoretical Lagrange model and the virtual robot in the RecurDyn although the stability performance and the tendencies of the results agree well. Because this error is due to the slip effect of the wheels. An outer gimbal bearing to the ground can be used for the robot to spin freely around its geometric axis. Hence, the comparisons of the theoretical and RecurDyn results will be the same by ignoring the slip effect of the wheels.

2.2 | Uncontrolled CMGs under a constant recoil force

Figure 3 illustrates the comparisons of the time displacements of RecurDyn and theoretical Matlab simulations when subjected to the constant load of $F = 120$ N without a controller. It is concluded from

15564967, 2024, 4, Downloaded from https://onlinelibrary.wiley.com/doi/10.1002/rob.22305 by Egyptian National Sci. Network (Einstinet), Wiley Online Library on [28/02/2026]. See the Terms and Conditions (https://onlinelibrary.wiley.com/terms-and-conditions) on Wiley Online Library for rules of use; OA articles are governed by the applicable Creative Commons License

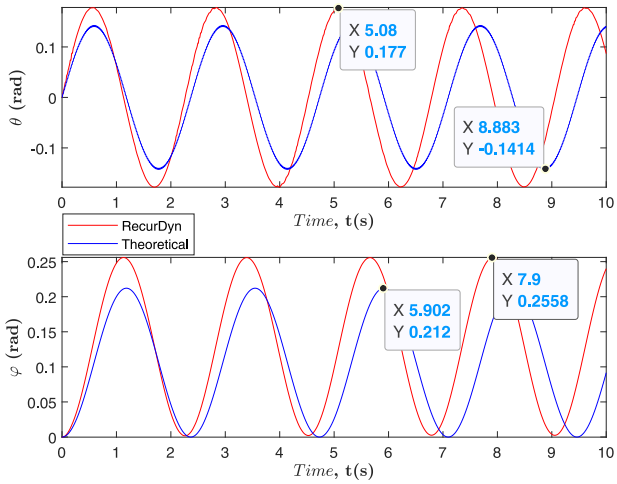

FIGURE 3 Comparisons of the time displacements for the double flywheels rotating in the same direction ($\Omega = 3000$ rad/s) when subjected to the constant load of $F = 120$ N without a controller.

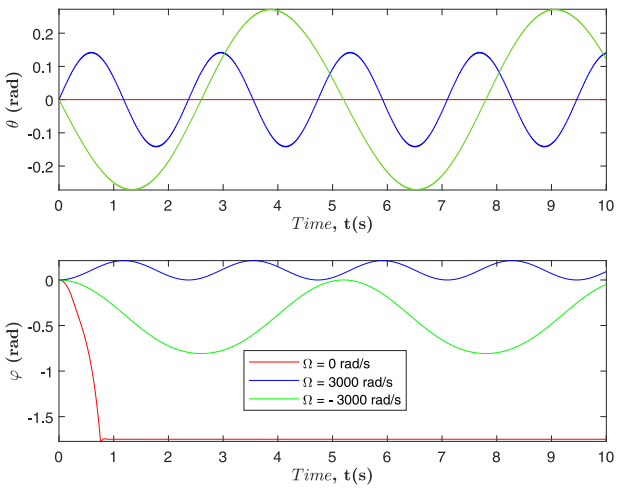

FIGURE 4 Rotating direction effect of flywheels on the time displacements for the double flywheels rotating in the same direction when subjected to the constant load of $F = 120$ N without a controller.

the figures that the displacement behavior in all models demonstrates a stable state of an oscillating motion. From the results of Lagrangian equations of motion in Figure 3, the displacement of the gimbal keeps the stability at the amplitude of 0.14 rad, while the φ displacement settles at the amplitude of 0.10 rad.

In the theoretical simulations from equations of motion, Figure 4 shows that the displacement amplitudes for $\Omega = 3000$ rad/s considerably decrease compared to the displacement amplitudes for $\Omega = -3000$ rad/s. Because the direction measurement of cornering is important to keep the vehicle in its upright position. For this reason, the flywheels are spinning in the same direction and angular speeds according to the cornering direction and speed of the robot cornering. Besides, zero velocity flywheels cannot maintain the stability of the robot under a recoil force during maneuvers as seen in Figure 4.

In this paper, CMG consists of two flywheels being controlled for the direction of cornering speed. Hence, the gyroscope generates the counterbalance torque to the two-wheeled robot in the upright position. Besides, the CMG control algorithms can be proposed to stabilize the two-wheeled robot. So, in this study, double flywheels rotating in the same direction for the appropriate cornering direction of the robot were practically chosen to investigate the vibration attenuation performance of the gyroscope for LQR optimization.

2.3 | Controller design for two-wheeled robot with double gyroscopes

Equation (10) that is obtained from Equation (8) was originally a homogeneous differential equation, but the term τ_{gimbal} was added in Equation (10) to design the controller. Subsequently, τ_{gimbal} will act as the control signal governing gyroscopic precession, ensuring the stability of the two-wheeled robot during maneuvering.

Gyroscopic precession occurs when a gyroscope, which is a spinning wheel or disc, experiences a force in a direction that is not aligned with its axis of rotation. Instead of immediately reacting to the applied force, the gyroscope precesses or tilts in a manner that is perpendicular to the force being applied. This precession effect can be used in control systems to counteract external forces and maintain stability. The dynamic model of the two-wheeled robot is formulated based on the robot's capability to perform rotational movements solely on a flat surface. Therefore, gyroscopic precession control via an LQR is used to control the orientation and stability of the robot by tilting the gimbal of a spinning flywheel by applying gimbal torque (τ_{gimbal}) to counteract the recoil force and keep the robot stable during high-speed maneuvers.

LQR finds widespread application in stabilizing two-wheeled robots and controlling vehicle suspensions (Amin et al., 2023; Çetin & Ünker, 2023; Chan et al., 2013; Gopala Rao & Narayanan, 2020; Nekoui & Hadavi, 2010; Yongjun et al., 2003). Despite the inherent nonlinearity in system dynamics, LQR proves effective by linearizing the system around an operating point, offering stable control within a specific operating range. The system's multi-input, multioutput nature, coupled with interconnected dynamics, aligns well with LQR's capabilities. This control approach excels in handling coupled dynamics, optimizing control efforts across all inputs, and considering their interdependencies. In the proposed system, as described by Equations (10) and (11), the gyro tilt angle (θ) and head angle (φ) mutually influence each other, exemplifying coupling. When designing a control system for such interconnected states, LQR stands out by allowing simultaneous consideration of both states and optimizing overall system performance. Particularly in cases of significant coupling, LQR proves more effective than proportional–integral–derivative controllers, which face challenges in managing state interactions.

15564967, 2024, 4, Downloaded from https://onlinelibrary.wiley.com/doi/10.1002/rob.22305 by Egyptian National Sci. Network (Enstinet), Wiley Online Library on [28/02/2026]. See the Terms and Conditions (https://onlinelibrary.wiley.com/terms-and-conditions) on Wiley Online Library for rules of use; OA articles are governed by the applicable Creative Commons License

After obtaining differential equations of $\ddot{\varphi}$ and $\ddot{\theta}$ by manipulating Equations (10) and (11), the nonlinear dynamics of the Maneuvering Two-Wheeled Robot in the presence of recoil effect is linearized around the operating points of the states. The Jacobian linearization method (Fadali & Visioli, 2012) is employed for this purpose. Consequently, the system can be expressed as a linear state-space model, represented by Equations (12) and (13).

$$\dot{\boldsymbol{x}}(t) = A\boldsymbol{x}(t) + B\boldsymbol{u}(t) + B_d d(t), \tag{12}$$

$$\boldsymbol{y}(t) = C\boldsymbol{x}(t), \tag{13}$$

where $A \in \mathscr{R}^{4\times4}$ is the state matrix, $B \in \mathscr{R}^{4\times1}$ is the input matrix, $B_d \in \mathscr{R}^{4\times1}$ is the disturbance vector, $C \in \mathscr{R}^{4\times4}$ is the output matrix, $\boldsymbol{x}(t) \in \mathscr{R}^4$ is the state vector, $\boldsymbol{u}(t) \in \mathscr{R}$ is the control input vector, and $\boldsymbol{y}(t) \in \mathscr{R}^{1\times4}$ is the measurement vector and $\boldsymbol{d}(t) \in \mathscr{R}$ is the disturbance(recoil) input.

$$\text{Let} \quad \boldsymbol{x} = [x_1, x_2, x_3, x_4]^T, \quad u = \tau_{gimbal}, \quad d = F,$$

where

$$x_1 = \varphi, \quad x_2 = \dot{\varphi}, \quad x_3 = \theta, \quad x_4 = \dot{\theta}.$$

Equations (10) and (11) are transformed into first-order differential equations, as shown below, to establish the linearized state-space representation, depicted in Equations (12) and (13).

$$\text{Let} \quad f_1(x_2) = \dot{x}_1, \quad f_2(x_1, x_2, x_3, x_4, d) = \dot{x}_2, \quad f_3(x_4) = \dot{x}_3, \quad f_4(x_1, x_2, x_3, u) = \dot{x}_4,$$

Matrices of the linearized state-space model presented in Equations (12) and (13) can be computed by utilizing Jacobians as follows:

$$A = \begin{bmatrix} \left.\frac{\partial f_1(x_2)}{\partial x_1}\right|_{(x_0,u_0,d_0)} & \cdots & \left.\frac{\partial f_1(x_2)}{\partial x_4}\right|_{(x_0,u_0,d_0)} \\ \vdots & \ddots & \vdots \\ \left.\frac{\partial f_4(x_1,x_2,x_3,u)}{\partial x_1}\right|_{(x_0,u_0,d_0)} & \cdots & \left.\frac{\partial f_4(x_1,x_2,x_3,u)}{\partial x_4}\right|_{(x_0,u_0,d_0)} \end{bmatrix}_{4\times4}, \tag{14}$$

$$B = \begin{bmatrix} \left.\frac{\partial f_1(x_2)}{\partial u}\right|_{(x_0,u_0,d_0)} \\ \vdots \\ \left.\frac{\partial f_4(x_1,x_2,x_3,u)}{\partial u}\right|_{(x_0,u_0,d_0)} \end{bmatrix}_{4\times1}, \quad B_d = \begin{bmatrix} \left.\frac{\partial f_1(x_2)}{\partial d}\right|_{(x_0,u_0,d_0)} \\ \vdots \\ \left.\frac{\partial f_4(x_1,x_2,x_3,u)}{\partial d}\right|_{(x_0,u_0,d_0)} \end{bmatrix}_{4\times1}. \tag{15}$$

The operating points of the states, input, and disturbance are $\boldsymbol{x}_0 = \boldsymbol{0}$, $u_0 = 0$, $d_0 = 0$, respectively. Eventually, the linearized state-space model of the maneuvering two-wheeled robot in the presence of recoil effect is derived as

$$A = \begin{bmatrix} 0 & 1 & 0 & 0 \\ a_{21} & 0 & 0 & a_{24} \\ 0 & 0 & 0 & 1 \\ 0 & a_{42} & a_{43} & 0 \end{bmatrix}, \quad B = \begin{bmatrix} 0 \\ 0 \\ 0 \\ b_{41} \end{bmatrix}, \quad B_d = \begin{bmatrix} 0 \\ bd_{21} \\ 0 \\ 0 \end{bmatrix}, \tag{16}$$

where

$$a_{21} = \frac{(Y_3 + 2X_3)\varepsilon^2 + 2X_4\varepsilon + Y_4}{Y_1 + 2X_2}, \quad a_{42} = \frac{X_4 + \varepsilon(X_2 - X_1 - X_3)}{X_1},$$

$$a_{43} = \frac{\varepsilon^2(X_2 - X_3) + \varepsilon X_4}{X_1},$$

$$a_{24} = -\frac{2\varepsilon(X_2 - X_1 - X_3) + 2X_4}{Y_1 + 2X_2},$$

$$b_{41} = \frac{1}{X_1}, \quad bd_{21} = \frac{-R_c\cos(\alpha)}{Y_1 + 2X_2}.$$

Given the proposed dynamic system, it is assumed that all states are measurable; thus,

$$C = \begin{bmatrix} 1 & \cdots & 0 \\ \vdots & \ddots & \vdots \\ 0 & \cdots & 1 \end{bmatrix}_{4\times4}.$$

LQR is employed for the stability subsystem which is derived by excluding the disturbance term in Equations (14) and (15). Assuming we aim to create state feedback control, represented by $u = -\boldsymbol{K}x$, for system stabilization, the design of $\boldsymbol{K}$ involves finding a balance between the transient response and the control effort. To address this design tradeoff optimally, we adopt an optimal control approach by defining a performance index, also known as a cost functional which can be expressed as (Lewis et al., 2012)

$$J = \int_0^\infty (\boldsymbol{x}^T Q\boldsymbol{x} + \boldsymbol{u}^T R\boldsymbol{u})\, dt. \tag{17}$$

Our goal is to find the control input $u = -Kx$ that minimizes this index. In this context, Q represents a 4×4 symmetric positive semidefinite matrix, while R is a 1×1 symmetric positive definite matrix.

Theorem 1. *If we have a system represented by matrices* (A, B) *that is stabilizable, and we choose a positive definite matrix* R *and a positive semidefinite matrix* Q*, along with the observability of the pair* $(A, \sqrt{Q})$*, then the closed-loop system* $(A - BK)$ *will be asymptotically stable* (Lewis et al., 2012).

When the system satisfies the conditions described in Theorem 1, the optimal feedback controller gain K, can be designed by minimizing the cost function described in Equation (17). As a result, K can be calculated using Equation (18):

$$K = R^{-1}B^T P, \tag{18}$$

where P is calculated by solving Algebraic Ricatti Equation (19),

$$A^T P + PA - PBR^{-1}B^T P + Q = 0. \tag{19}$$

15564967, 2024, 4, Downloaded from https://onlinelibrary.wiley.com/doi/10.1002/rob.22305 by Egyptian National Sci. Network (Enstinet), Wiley Online Library on [28/02/2026]. See the Terms and Conditions (https://onlinelibrary.wiley.com/terms-and-conditions) on Wiley Online Library for rules of use; OA articles are governed by the applicable Creative Commons License

Consequently, after achieving optimal feedback gain K, the optimal feedback control law becomes

$$\boldsymbol{u}(t) = -K\boldsymbol{x}(t). \tag{20}$$

2.4 | Numerical values for controlled CMG

After substituting the system parameters of Table 1 into Equation (16), the state-space matrices of the linear system, as presented in Equations (12) and (13), are calculated as follows:

$$A = \begin{bmatrix} 0 & 1 & 0 & 0 \\ 78.023 & 0 & 0 & -24.188 \\ 0 & 0 & 0 & 1 \\ 0 & 4482.9 & 8969.8 & 0 \end{bmatrix},$$

$$B = \begin{bmatrix} 0 \\ 0 \\ 0 \\ 64.0809 \end{bmatrix}, \quad B_d = \begin{bmatrix} 0 \\ -0.069151 \\ 0 \\ 0 \end{bmatrix},$$

$$C = \begin{bmatrix} 1 & \cdots & 0 \\ \vdots & \ddots & \vdots \\ 0 & \cdots & 1 \end{bmatrix}_{4\times 4}.$$

LQR controller is designed for the stability subsystem below,

$$\dot{\boldsymbol{x}}(t) = A\boldsymbol{x}(t) + B\boldsymbol{u}(t),$$

$$\boldsymbol{y}(t) = C\boldsymbol{x}(t).$$

To achieve the desired response, the LQR controller is designed using specific Q and R matrices. The controller's objective is to stabilize the system states of a two-wheeled maneuvering armored robot, which is exposed to weapon firing loads, and maintain a constant α angle at a predefined position. Note that, in this scenario, the recoil impulsive loads are considered external disturbances to the system.

$$Q = \begin{bmatrix} 50,000 & 0 & 0 & 0 \\ 0 & 1 & 0 & 0 \\ 0 & 0 & 50,000 & 0 \\ 0 & 0 & 0 & 1 \end{bmatrix}, \quad R = 0.4.$$

The proposed system satisfies the conditions of Theorem 1. State matrices have a stabilizable pair of (A, B) and observable pair of $(A, \sqrt{Q})$, so the LQR controller can be designed for the stability subsystem and the closed-loop system $(A - BK)$ will be asymptotically stable.

The computation of the optimal feedback control gain K, is obtained by employing the LQR controller design procedure outlined in Section 3. Consequently, K is calculated as

$$K = [-519.93 \quad -12.257 \quad -240.28 \quad 2.0625].$$

3 | RESULTS FOR CONTROLLED CMG

Figure 5 illustrates the proposed controller for both RecurDyn and the State-Space (theoretical) schematic diagrams. The designed feedback controller shown in Figure 5 is mainly responsible for generating a control signal, specifically for the gyro's gimbal torque as shown in Figures 6 and 12. The main purpose is to reduce the recoil energy and minimize tilt angle movement.

3.1 | Controlled CMGs under a constant recoil force

Figures 6–10 illustrate the comparisons of the control torque signals and the time displacements of RecurDyn and state-space (theoretical) simulations for the double flywheels rotating in the same direction ($\Omega = 3000$ rad/s). In the below comparisons, it can be observed that the responses of RecurDyn and theoretical are stable and the tendencies of the results match well despite the slip effect of the wheels when subjected to the constant load of $F = 120$ N with the LQR controller. Due to the slip effect of the wheels, there is a steady-state error between the simulations of the theoretical state-space model and the virtual robot in the RecurDyn. The simulation results of Figure 6 demonstrate that the LQR generates reversibly controlled torque in balance, giving the CMG rapid settle within 1 s when exposed to a recoil force.

Figures 7 and 8 indicate the time displacements of both the state-space and RecurDyn simulations for the head angle (φ) and θ under recoil force. It is clear from the figures that both simulations demonstrate stable φ and θ displacement behavior under a constant recoil force ($F = 120$ N). In the state-space model simulation, the φ displacement reaches a steady-state value of 0.106 rad within 1.4 s and the θ displacement reaches a steady-state value of −0.146 rad within 1.4 s. As a result, LQR-controlled CMG including double flywheels demonstrated the desired stability with a small steady-state error between the virtual robot balancing simulation in the RecurDyn plant and the theoretical closed-loop state-space model.

Figures 9 and 10 illustrate the time displacement comparisons between the LQR-controlled and uncontrolled CMGs obtained from RecurDyn simulations when subjected to the constant load of $F = 120$ N. It is concluded from the figures that the uncontrolled behavior demonstrates a stable state of an oscillating motion. In the LQR-controlled simulation from Figure 9, the φ-displacement reaches a settled state of 0.13 rad which is midpoint of the amplitude of the stable state of the oscillating motion of uncontrolled behavior. Whereas the θ-displacement of the LQR-controlled simulation in Figure 10 settles at −0.18 rad which is the maximum amplitude of the stable state of the oscillating motion of uncontrolled behavior. It is concluded from the figures that the flywheels' spinning direction according to the cornering is important to decrease the settling time and peak overshoot. Because, the displacement amplitude and settling time for $\Omega = 3000$ rad/s considerably decrease compared to the displacement amplitudes for $\Omega = -3000$ rad/s under a recoil force during maneuvers. Besides, the LQR-controlled CMG have greater robustness than the uncontrolled one as seen in Figures 9 and 10, in which the oscillating motions have been prevented.

15564967, 2024, 4, Downloaded from https://onlinelibrary.wiley.com/doi/10.1002/rob.22305 by Egyptian National Sci. Network (Enstinet), Wiley Online Library on [28/02/2026]. See the Terms and Conditions (https://onlinelibrary.wiley.com/terms-and-conditions) on Wiley Online Library for rules of use; OA articles are governed by the applicable Creative Commons License

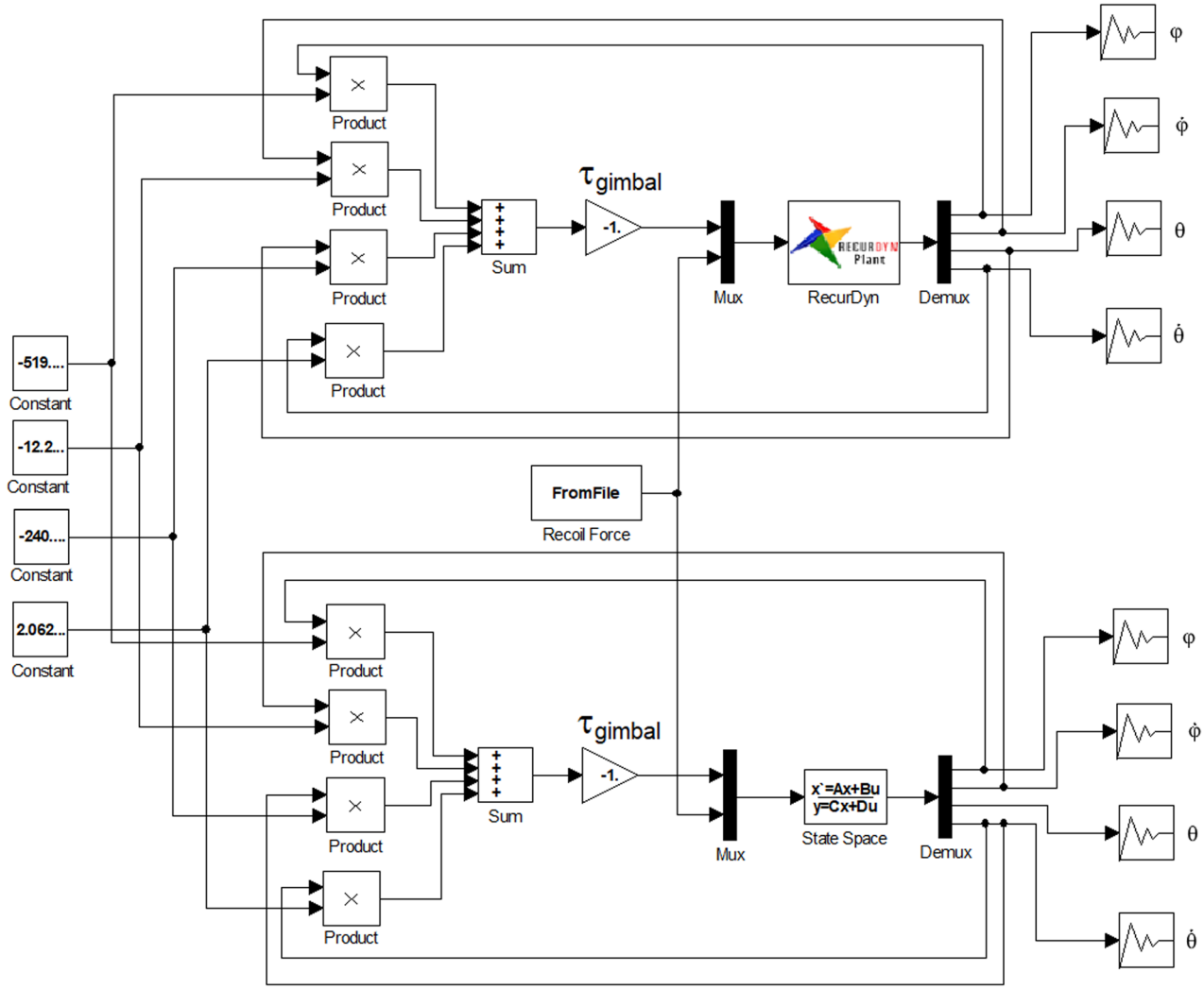

FIGURE 5 The closed-loop control diagrams for RecurDyn and state-space (theoretical) simulations.

3.2 | Controlled CMGs under a random firing load pulses

Figure 11 illustrates the random and continuous firing load pulses within 2 s and one peak of waveform shot of the recoil impulsive force caused by a weapon firing load for 600 rounds/min (Figurski & Rybak, 2007). The impulsive force from random recoil is created by generating random numbers between 0.85 and 1.15 with seed 42, and then multiplying them by the signal as seen in Figure 11.

Figures 12–14 give the comparisons of the control torque signals and the time displacements of RecurDyn and state-space simulations of the robot with the LQR controller for the double flywheels rotating in the same direction ($\Omega = 3000$ rad/s) when subjected to the recoil force of the signal as seen in Figure 11. From the below comparisons, it can be concluded that the responses of RecurDyn and state-space are stable and the tendencies of the results agreed well. However, there is a very small steady-state error between the simulations of the theoretical state-space model and the virtual robot in the RecurDyn due to the slip effect of the wheels. The simulation results of Figure 12 showed that the control torque using the LQR controller powerfully responded in steady-state under the random recoil force.

Figures 13 and 14 indicate the time displacements of both the theoretical and RecurDyn simulations for the head angle (φ) and θ under a random firing recoil force. It is clear from the figures that both simulations demonstrate stable φ and θ displacement behavior when subjected to recoil impulsive loads. Fluctuations in the responses are caused by a random firing recoil and it can be observed that the responses of RecurDyn and theoretical displacements match closely. Fluctuations in the control torque signals and the time displacements can be suppressed by using a damper between the cannon (weapon) and the robot's body.

15564967, 2024, 4, Downloaded from https://onlinelibrary.wiley.com/doi/10.1002/rob.22305 by Egyptian National Sci. Network (Einstinet), Wiley Online Library on [28/02/2026]. See the Terms and Conditions (https://onlinelibrary.wiley.com/terms-and-conditions) on Wiley Online Library for rules of use; OA articles are governed by the applicable Creative Commons License

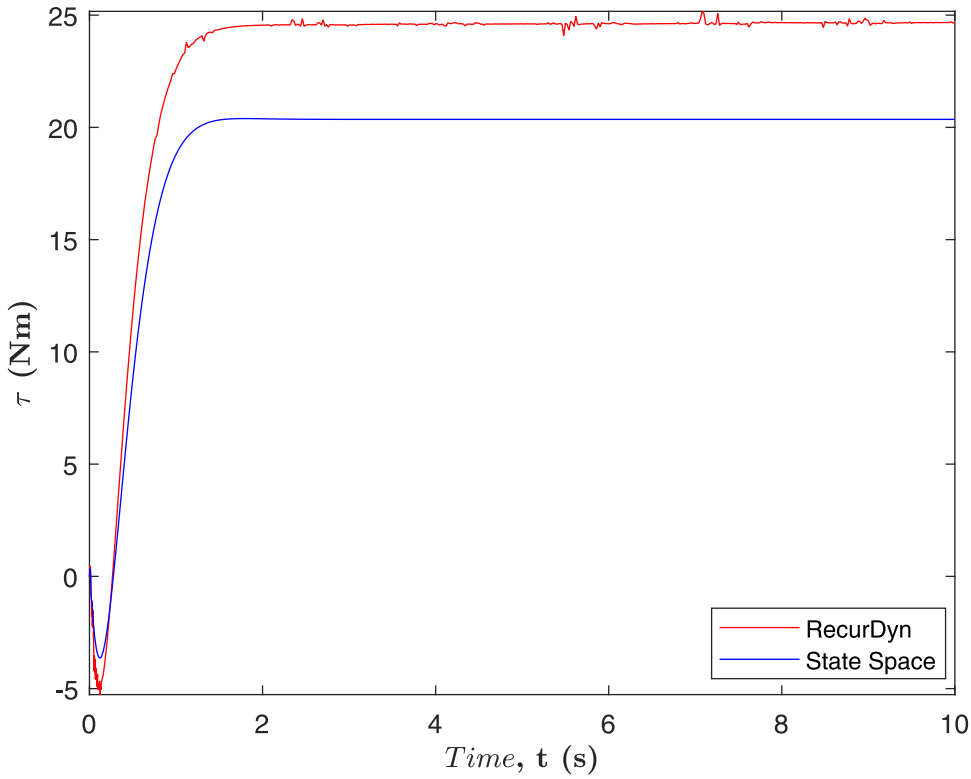

FIGURE 6 Control torque signals from RecurDyn and state-space (theoretical) simulations for the double flywheels rotating in the same direction (Ω = 3000 rad/s) when subjected to the constant load of F = 120 N with the LQR controller. LQR, linear-quadratic regulator.

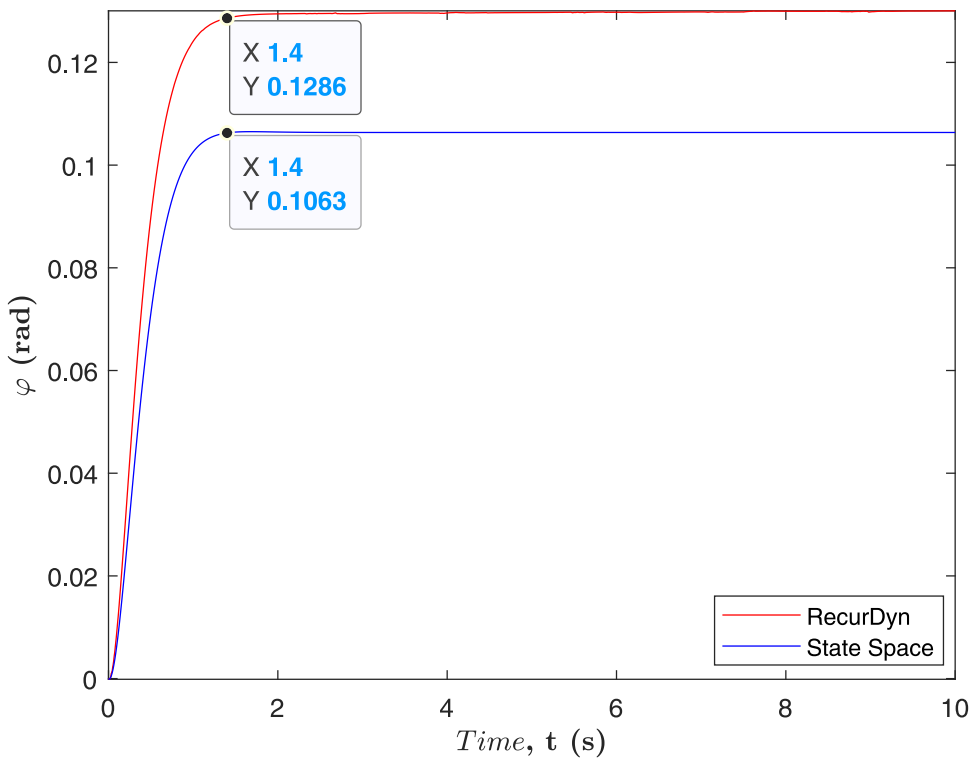

FIGURE 7 Comparisons of φ-head angles from RecurDyn and state-space (theoretical) simulations for the double flywheels rotating in the same direction (Ω = 3000 rad/s) when subjected to the constant load of F = 120 N with the LQR controller. LQR, linear-quadratic regulator.

15564967, 2024, 4, Downloaded from https://onlinelibrary.wiley.com/doi/10.1002/rob.22305 by Egyptian National Sci. Network (Einstinet), Wiley Online Library on [28/02/2026]. See the Terms and Conditions (https://onlinelibrary.wiley.com/terms-and-conditions) on Wiley Online Library for rules of use; OA articles are governed by the applicable Creative Commons License

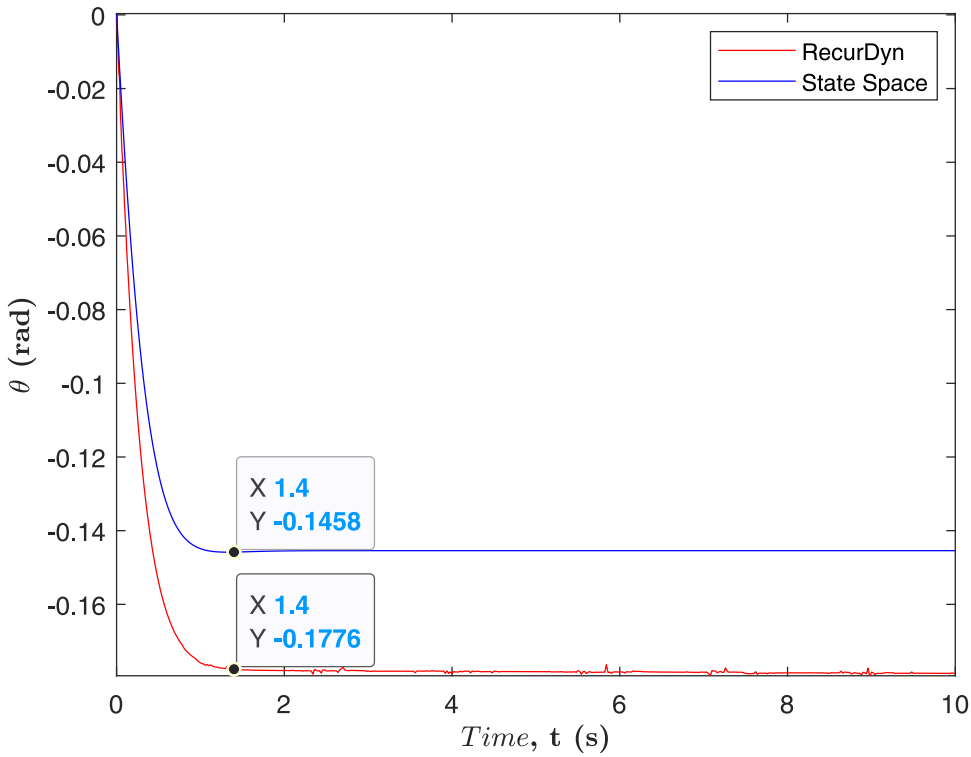

FIGURE 8 Comparisons of θ-precession angles from RecurDyn and state-space (theoretical) simulations for the double flywheels rotating in the same direction ($\Omega = 3000$ rad/s) when subjected to the constant load of $F = 120$ N with the LQR controller. LQR, linear-quadratic regulator.

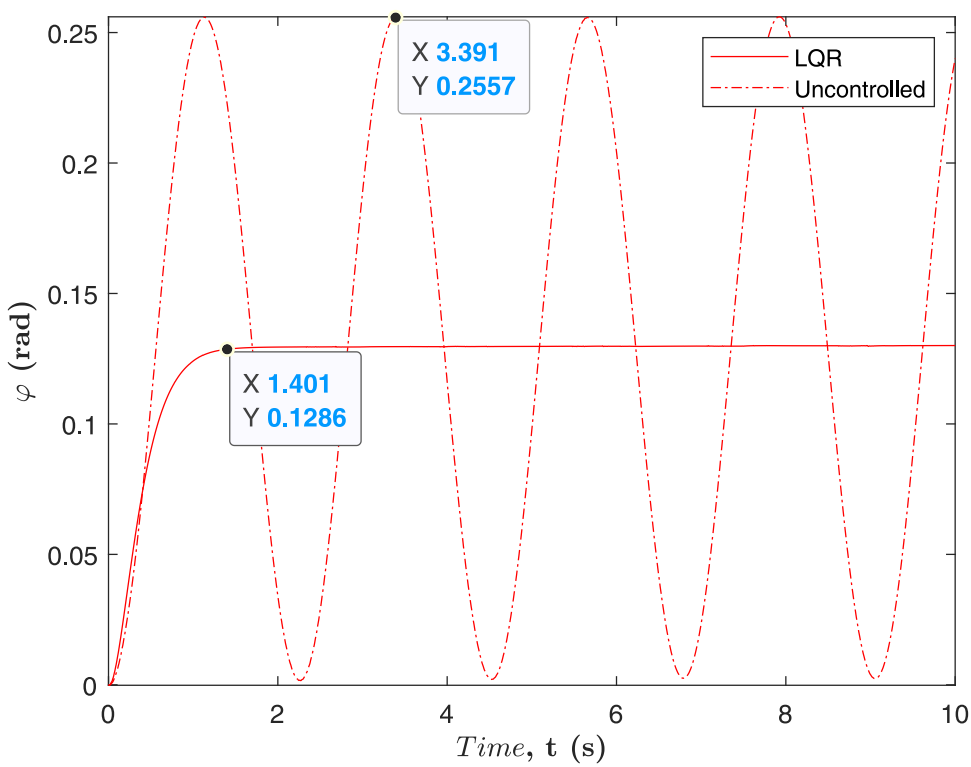

FIGURE 9 LQR-controlled and uncontrolled CMG comparisons of φ-head angles from RecurDyn simulations for the double flywheels rotating in the same direction ($\Omega = 3000$ rad/s) when subjected to the constant load of $F = 120$ N. CMG, control moment gyroscope; LQR, linear-quadratic regulator.

15564967, 2024, 4, Downloaded from https://onlinelibrary.wiley.com/doi/10.1002/rob.22305 by Egyptian National Sci. Network (Einstinet), Wiley Online Library on [28/02/2026]. See the Terms and Conditions (https://onlinelibrary.wiley.com/terms-and-conditions) on Wiley Online Library for rules of use; OA articles are governed by the applicable Creative Commons License

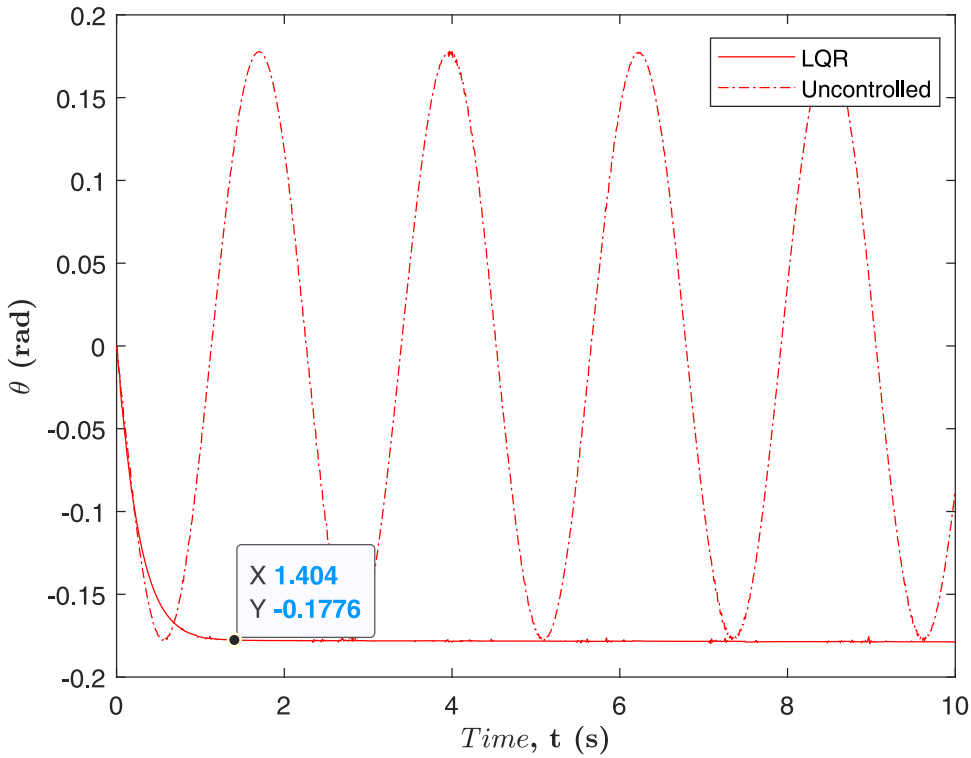

FIGURE 10 LQR-controlled and uncontrolled CMG comparisons of θ-precession angles from RecurDyn simulations for the double flywheels rotating in the same direction ($\Omega = 3000$ rad/s) when subjected to the constant load of $F = 120$ N. CMG, control moment gyroscope; LQR, linear-quadratic regulator.

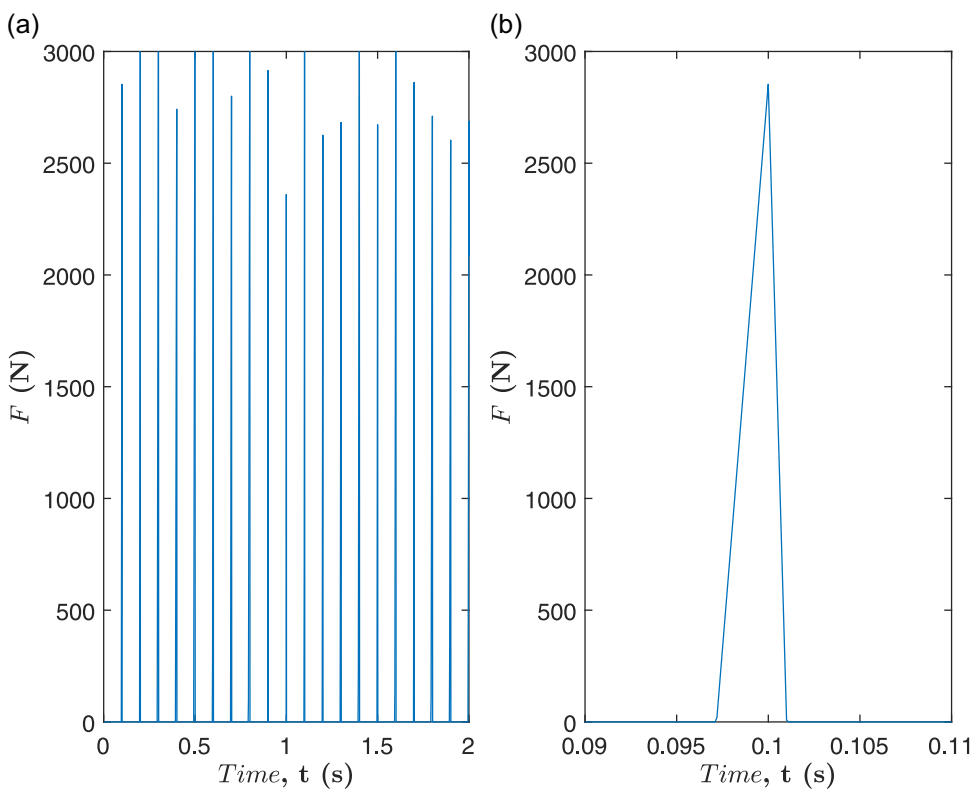

FIGURE 11 The continuous firing rate conditions of the recoil force. (a) The random pulses within 2 s and (b) the shot duration of a random peak.

15564967, 2024, 4, Downloaded from https://onlinelibrary.wiley.com/doi/10.1002/rob.22305 by Egyptian National Sti. Network (Enstinet), Wiley Online Library on [28/02/2026]. See the Terms and Conditions (https://onlinelibrary.wiley.com/terms-and-conditions) on Wiley Online Library for rules of use; OA articles are governed by the applicable Creative Commons License

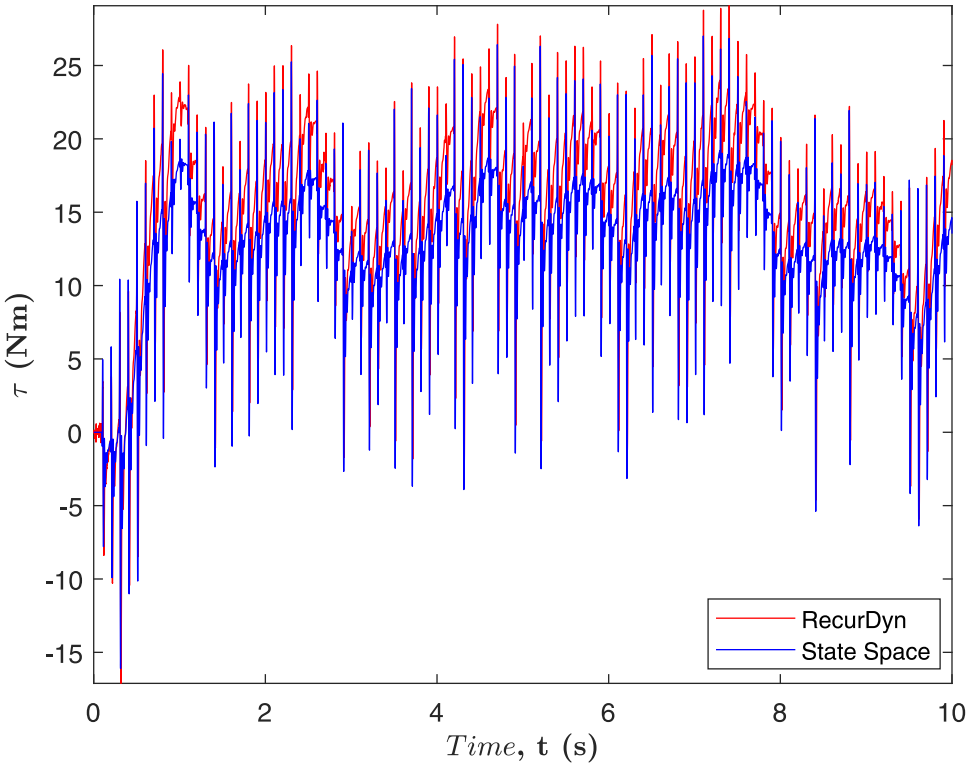

FIGURE 12 Control torque signals from RecurDyn and state-space (theoretical) simulations for the double flywheels rotating in the same direction (Ω = 3000 rad/s) under the random firing load pulses.

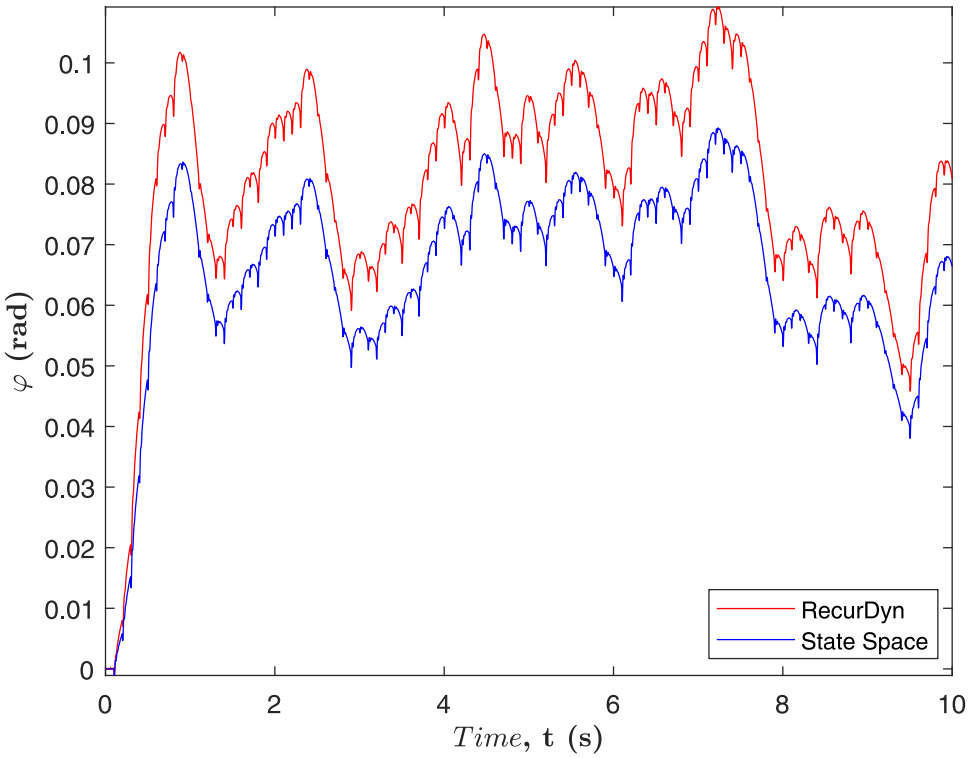

FIGURE 13 Comparisons of φ-head angles from RecurDyn and state-space (theoretical) simulations for the double flywheels rotating in the same direction (Ω = 3000 rad/s) under the random firing load pulses.

15564967, 2024, 4, Downloaded from https://onlinelibrary.wiley.com/doi/10.1002/rob.22305 by Egyptian National Sti. Network (Enstinet), Wiley Online Library on [28/02/2026]. See the Terms and Conditions (https://onlinelibrary.wiley.com/terms-and-conditions) on Wiley Online Library for rules of use; OA articles are governed by the applicable Creative Commons License

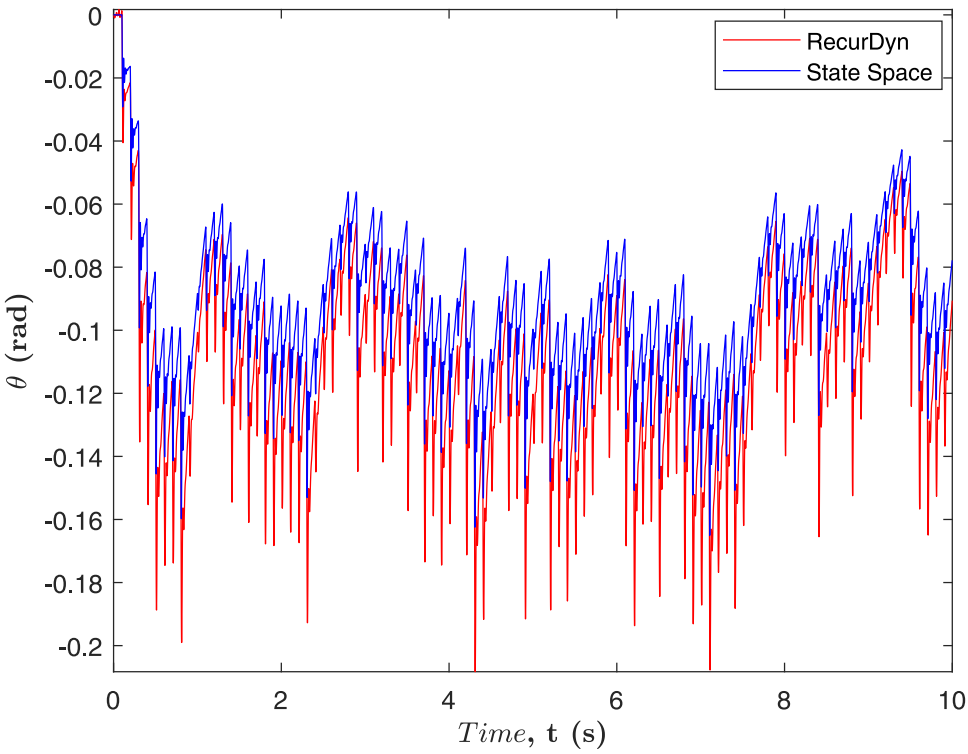

FIGURE 14 Comparisons of θ-precession angles from RecurDyn and state-space (theoretical) simulations for the double flywheels rotating in the same direction (Ω = 3000 rad/s) under the random firing load pulses.

4 | CONCLUSION

In this paper, a two-wheeled robot that utilizes a CMG for the posture control stabilization system is proposed while spinning around under recoil force. The stability and robustness of the designed CMG are verified by three configurations: single gyro balance, double gyro balance, and single gyro balance after placing the LQR controller. At first, the control performance of the uncontrolled double CMGs is studied under recoil force. Double CMGs are proposed for balancing the robot's posture (heading) angle and gyro's precession. However, It is concluded that using uncontrolled double CMGs is effective. Furthermore, the uncontrolled CMGs could balance two-wheeled robots via oscillating motions. However, position tracking while spinning around requires a more robust controller. So, an LQR controller was implemented to prevent oscillating motions of double CMGs under the recoil force of a weapon. The theoretical closed-loop state-space model and related K-vector of the LQR feedback controller have been derived. Then, The K-vector has been implemented in the RecurDyn plant of the rigid model. Both the rigid model and the state-space model have been simultaneously simulated in RecurDyn. The simulations have greater robustness than the uncontrolled CMGs, in which the oscillating motions have been prevented. Based on these findings, future investigations will focus on implementing advanced controllers, such as adaptive controllers, to mitigate the recoil effect in the proposed system. Furthermore, to enhance applicability in real-time settings, an examination of scenarios incorporating sensor noise and modeling errors is planned. In these instances, the goal is to devise controllers tailored to minimize any detrimental impacts. Notably, this robot can be used for a defensive purpose and thanks to this robot, the need for human soldiers may be reduced.

NOMENCLATURE

F	recoil force exerted on the cannon
g	gravity acceleration
G_b	mass center of the body
G_c	mass center of the weapon
I_{bx}, I_{by}, I_{bz}	principal inertia moments of the body (from the mass center of the body)
I_{cy}, I_{cz}	weapon's principal moments of inertia
I_{gx}, I_{gy}, I_{gz}	principal inertia moments of each gimbal (from the mass center of each gimbal)
I_o	mass moment inertia of each flywheel
I_p	rotary inertia of each flywheel
I_{wx}, I_{wy}	wheel's rotary inertia
m_b	body mass
m_c	weapon mass
m_d	flywheel mass of the gyroscope
m_g	gimbal's mass
m_w	wheel's mass
r	radius of the wheel

15564967, 2024, 4, Downloaded from https://onlinelibrary.wiley.com/doi/10.1002/rob.22305 by Egyptian National Sti. Network (Einstinet), Wiley Online Library on [28/02/2026]. See the Terms and Conditions (https://onlinelibrary.wiley.com/terms-and-conditions) on Wiley Online Library for rules of use; OA articles are governed by the applicable Creative Commons License

R_b	length of the robot's body mass centroid
R_c	length of the centroid of the weapon mass
R_g	radius of the cornering of the gyroscope mass
R_w	radius of the cornering of the wheel mass
T_{body}	kinetic energy of the body
T_{cannon}	weapon's kinetic energy
$T_{flywheel}$	flywheel's kinetic energy of the gyro
T_{gimbal}	gimbal's kinetic energy
T_{total}	robot's total kinetic energy
T_{wheel}	wheel's kinetic energy
V_{total}	robot's total potential energy
(X, Y, Z)	world coordination

GREEK SYMBOLS

α	pitch (head) angle of the weapon
ε	velocity of spinning around the two-wheeled robot
Ω	rotational velocity of the flywheel
φ	pitch (head) angle of the body
τ_{gimbal}	control torque output exerted to each gimbal
θ	gimbal's roll angle

CONFLICT OF INTEREST STATEMENT

The authors declare no conflict of interest.

DATA AVAILABILITY STATEMENT

The data that support the findings of this study are available from the corresponding author upon reasonable request.

ORCID

Gökhan Çetin http://orcid.org/0000-0002-7960-1217
Faruk Ünker http://orcid.org/0000-0002-9709-321X

REFERENCES

Amin, A., Fouz, M.A. & Elsawaf, A. (2023) LQR stability control of scissor pair gyro-stabilized two wheel robot. In: *2023 5th International Youth Conference on Radio Electronics, Electrical and Power Engineering (REEPE)*. Moscow, Russian Federation: IEEE, pp. 1–7. https://doi.org/10.1109/REEPE57272.2023.10086769

Çetin, G. & Ünker, F. (2023) Control moment gyroscope recoil stabiliser including LQR controller for two-wheeled robot. *International Journal of Heavy Vehicle Systems*. In press. https://doi.org/10.1504/IJHVS.2023.10060383

Chan, R.P.M., Stol, K.A. & Halkyard, C.R. (2013) Review of modelling and control of two-wheeled robots. *Annual Reviews in Control*, 37(1), 89–103. Available from: https://doi.org/10.1016/j.arcontrol.2013.03.004

Fadali, M.S. & Visioli, A. (2012) *Digital control engineering: analysis and design*, 2nd edition. Waltham, MA: Academic Press.

Figurski, J. & Rybak, P. (2007) Fighting means quality and military vehicle load. *Journal of KONES Powertrain and Transport*, 14(2), 125–132.

Gopala Rao, L.V.V. & Narayanan, S. (2020) Optimal response of half car vehicle model with sky-hook damper based on LQR control. *International Journal of Dynamics and Control*, 8, 488–496. Available from: https://doi.org/10.1007/s40435-019-00588-9

Lewis, F.L., Vrabie, D.L. & Syrmos, V.L. (2012) *Optimal control*, 3rd edition. Hoboken, NJ: John Wiley & Sons Inc.

Nekoui, M.A. & Hadavi, P. (2010) Optimal control of an active suspension system. In: *Proceedings of 14th International Power Electronics and Motion Control Conference EPE-PEMC 2010*. Ohrid, Macedonia: IEEE, pp. T5-60–T5-63. https://doi.org/10.1109/EPEPEMC.2010.5606776

Reza Larimi, S., Zarafshan, P. & Moosavian, S.A.A. (2015) A new stabilization algorithm for a two-wheeled mobile robot aided by reaction wheel. *Journal of Dynamic Systems, Measurement and Control*, 137(1), 011009 (8pp).

Song, K.S., Kim, S.M., Kwak, M.K. & Zhu, W. (2023) Development of a control algorithm for active control of rolling motion of a ship using a gyrostabilizer. *Ocean Engineering*, 280, 114669.

Ünker, F. (2020) Tuned gyro pendulum stabilizer for control of vibrations in structures. *The International Journal of Acoustics and Vibration*, 25(3), 355–362. Available from: https://doi.org/10.20855/ijav.2020.25.31632

Ünker, F. (2022a) Proportional control moment gyroscope for two-wheeled self-balancing robot. *Journal of Vibration and Control*, 28(17–18), 2310–2318. Available from: https://doi.org/10.1177/10775463211009988

Ünker, F. (2022b) Oscillation control of two-wheeled robot using a gyrostabilizer. *Gazi Üniversitesi Fen Bilimleri Dergisi Part C: Tasarım ve Teknoloji*, 10(3), 547–557. Available from: https://doi.org/10.29109/gujsc.1062497

Ünker, F. (2022c) Angular momentum control for preventing rollover of a heavy vehicle. *International Journal of Automotive Science and Technology*, 6(2), 135–140. Available from: https://doi.org/10.30939/ijastech.1085111

Ünker, F. (2023a) Recoil stabilization of two-wheeled robot through control moment gyroscope (CMG). In: *2023 5th International Congress on Human–Computer Interaction, Optimization and Robotic Applications (HORA)*. Istanbul, Turkiye: IEEE, pp. 1–6. https://doi.org/10.1109/HORA58378.2023.10156663

Ünker, F. (2023b) Gyroscopic suspension for a heavy vehicle. *International Journal of Heavy Vehicle Systems*, 30(2), 201–210.

Ünker, F. & Çuvalcı, O. (2015a) Vibration control of a column using a gyroscope. *Procedia—Social and Behavioral Sciences*, 195, 2306–2315. ISSN 1877-0428. https://doi.org/10.1016/j.sbspro.2015.06.182

Ünker, F. & Çuvalcı, O. (2015b) Seismic motion control of a column using a gyroscope. *Procedia—Social and Behavioral Sciences*, 195, 2316–2325. Available from: https://doi.org/10.1016/J.SBSPRO.2015.06.183

Ünker, F. & Çuvalcı, O. (2016a) Optimum tuning of a gyroscopic vibration absorber using coupled gyroscopes for vibration control of a vertical cantilever beam. *Shock and Vibration*, 2016, 210–216. https://doi.org/10.1155/2016/1496727

Ünker, F. & Çuvalcı, O (2016b) Experimental investigation of a gyroscopic vibration absorber for vibration control of a vertical cantilever beam. *The Fourth International Conference Advances in Civil, Structural and Mechanical*, 3(1), 78–82.

Ünker, F. & Çuvalcı, O. (2019) Optimum tuning of a gyroscopic vibration absorber for vibration control of a vertical cantilever beam with tip mass. *The International Journal of Acoustics and Vibration*, 24(2), 210–216. Available from: https://doi.org/10.20855/ijav.2019.24.21158

Ünker, F. & Çuvalci, O. (2021) Gyroscopic vibration damper for building: theoretical and experimental research. *Gazi Journal of Engineering Sciences*, 8(3), 457–471. Available from: https://doi.org/10.30855/gmbd.0705034

Yongjun, S., Xiandong, L. & Shaopu, Y. (2003) Research on the application of optimal control theory on parameters optimization of vehicle suspension. *Journal of Low Frequency Noise, Vibration and Active*

15564967, 2024, 4, Downloaded from https://onlinelibrary.wiley.com/doi/10.1002/rob.22305 by Egyptian National Sti. Network (Enstinet), Wiley Online Library on [28/02/2026]. See the Terms and Conditions (https://onlinelibrary.wiley.com/terms-and-conditions) on Wiley Online Library for rules of use; OA articles are governed by the applicable Creative Commons License

Control, 22(4), 253–263. Available from: https://doi.org/10.1260/026309203323022607

SUPPORTING INFORMATION

Additional supporting information can be found online in the Supporting Information section at the end of this article.

How to cite this article: Çetin, G. & Ünker, F. (2024) Gyroscopic precession control for maneuvering two-wheeled robot recoil stabilization. *Journal of Field Robotics*, 41, 991–1005. https://doi.org/10.1002/rob.22305

15564967, 2024, 4, Downloaded from https://onlinelibrary.wiley.com/doi/10.1002/rob.22305 by Egyptian National Sti. Network (Enstinet), Wiley Online Library on [28/02/2026]. See the Terms and Conditions (https://onlinelibrary.wiley.com/terms-and-conditions) on Wiley Online Library for rules of use; OA articles are governed by the applicable Creative Commons License